Use buttons to control the LED modules

Table

1.What do you need to prepare 2

2.Knowledge and principle 3

2.1 Know the buttons 3

2.2 IO recognition button and control LED light experiment 3

3.Wiring Circle 4

4.Upload the code and test 6

5.Any questions and suggestions are welcome 8

1.What do you need to prepare

Components	Quantity	Picture
A to B USB cable	1	
Green LED module	1	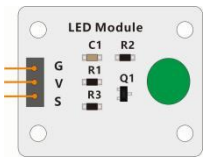
Red LED module	1	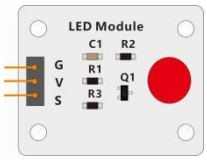
Green button module	1	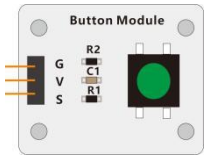
Red button module	1	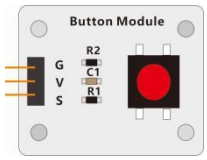
3Pin Female to female dupont wire	4	
Arduino UNO R3	1	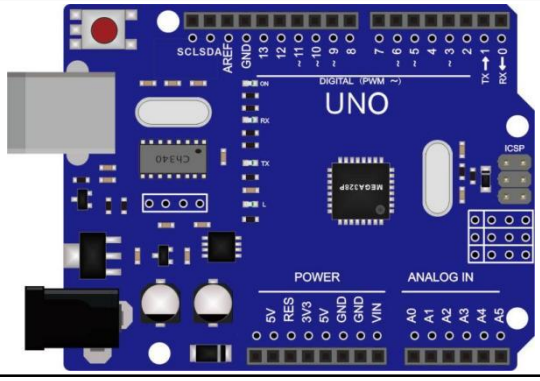

Expansion board for Arduino UNO	1	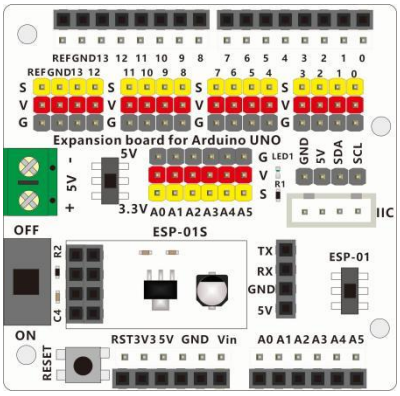

2.Knowledge and principle

2.1 Know the buttons

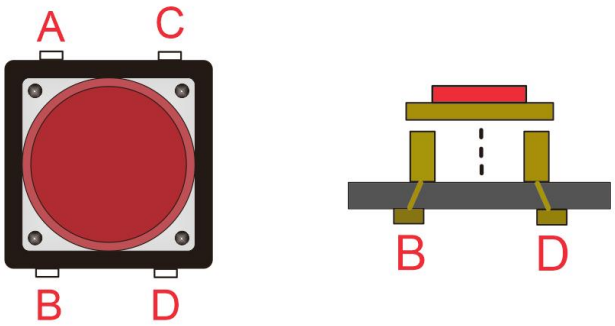

As shown in the above figure, pins A and B form a group and are conductive to each other, while pins C and D form a group and are conductive to each other. When the button is pressed, the AB group and CD group pins become conductive. When the hand is released, the button pops up and the AB group and CD group pins are disconnected.

2.2 IO recognition button and control LED light experiment

The main purpose of this experiment is to learn how to simply recognize which button is pressed through the IO port of UNO R3, and then output high and low levels to control the LED to light up and turn off. The main statements in this code are if... else... and key recognition to eliminate jitter.

When you manually press the button once, due to shaking, it may close and open the button multiple times, and the microcontroller will detect multiple button operations. For example, you want to turn on the LED light by pressing the button once and turn it off by pressing the button again. However, in actual operation, due to the presence of jitter, it is possible that pressing a button once actually closes the switch twice, and the light still goes out, which cannot achieve the effect of lighting up the light as you need. Therefore, we need to add jitter elimination in the code.

3.Wiring Circle

Insert the Arduino UNO expansion board onto the Arduino UNO R3 board, paying attention to the assembly direction.As shown in the following figure:

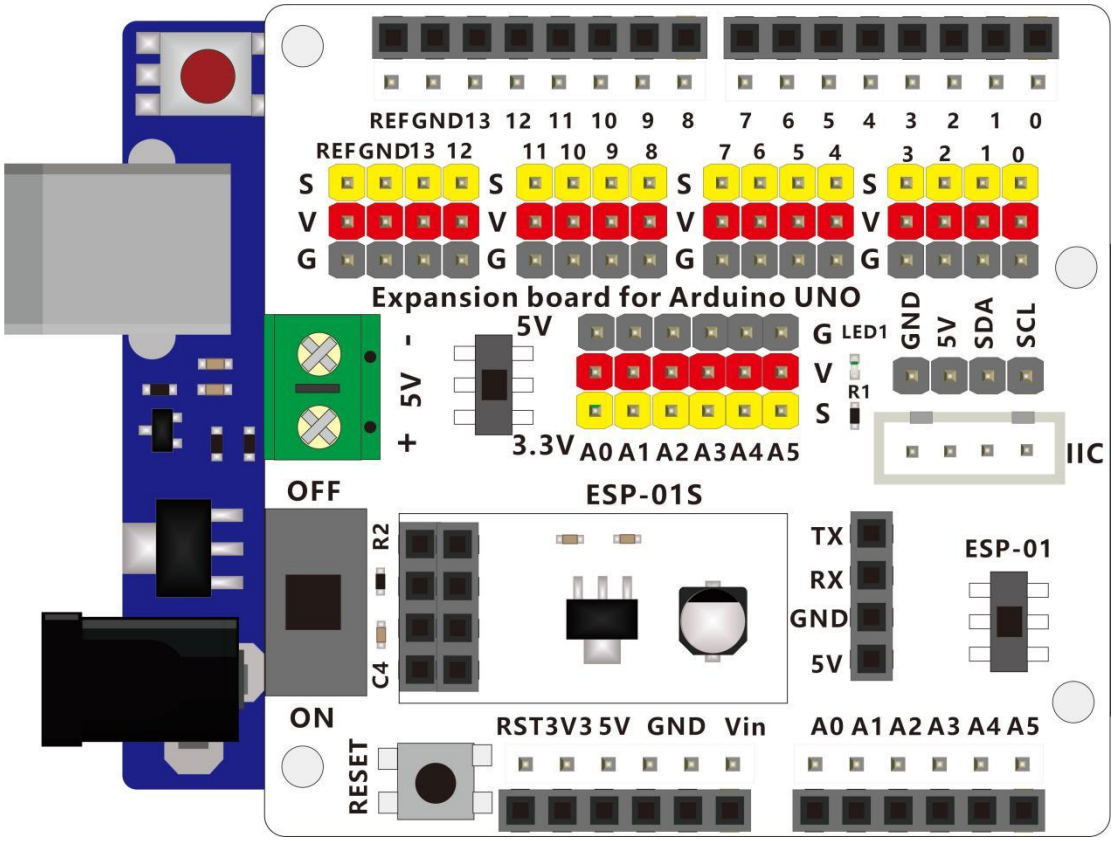

Turn the power switch on the expansion board to ON side and the 5V/3.3V switch to 5V side.

Connect the LED modules and button modules to the Arduino UNO Expansion board using male to male DuPont wires. Connect the signal pin of the Red LED module to D11 on the expansion board and the signal pin of the Green LED module to D12 on the expansion board. Connect the signal pin of the Red button module to D2 on the expansion board and the signal pin of the Green button module to D3 on the expansion board. Please refer to the following table for specific connection methods:

Connect the LED modules to the Expansion board for Arduino UNO	
Red LED module	Expansion board for Arduino UNO
S	D10
V	V
G	G
Green LED module	Expansion board for Arduino UNO
S	D12
V	V
G	G

Connect the Button modules to the Expansion board for Arduino UNO	
Red Button module	Expansion board for Arduino UNO
S	D2
V	V
G	G
Green Button module	Expansion board for Arduino UNO
S	D3
V	V
G	G

The hardware connection diagram is as follows:

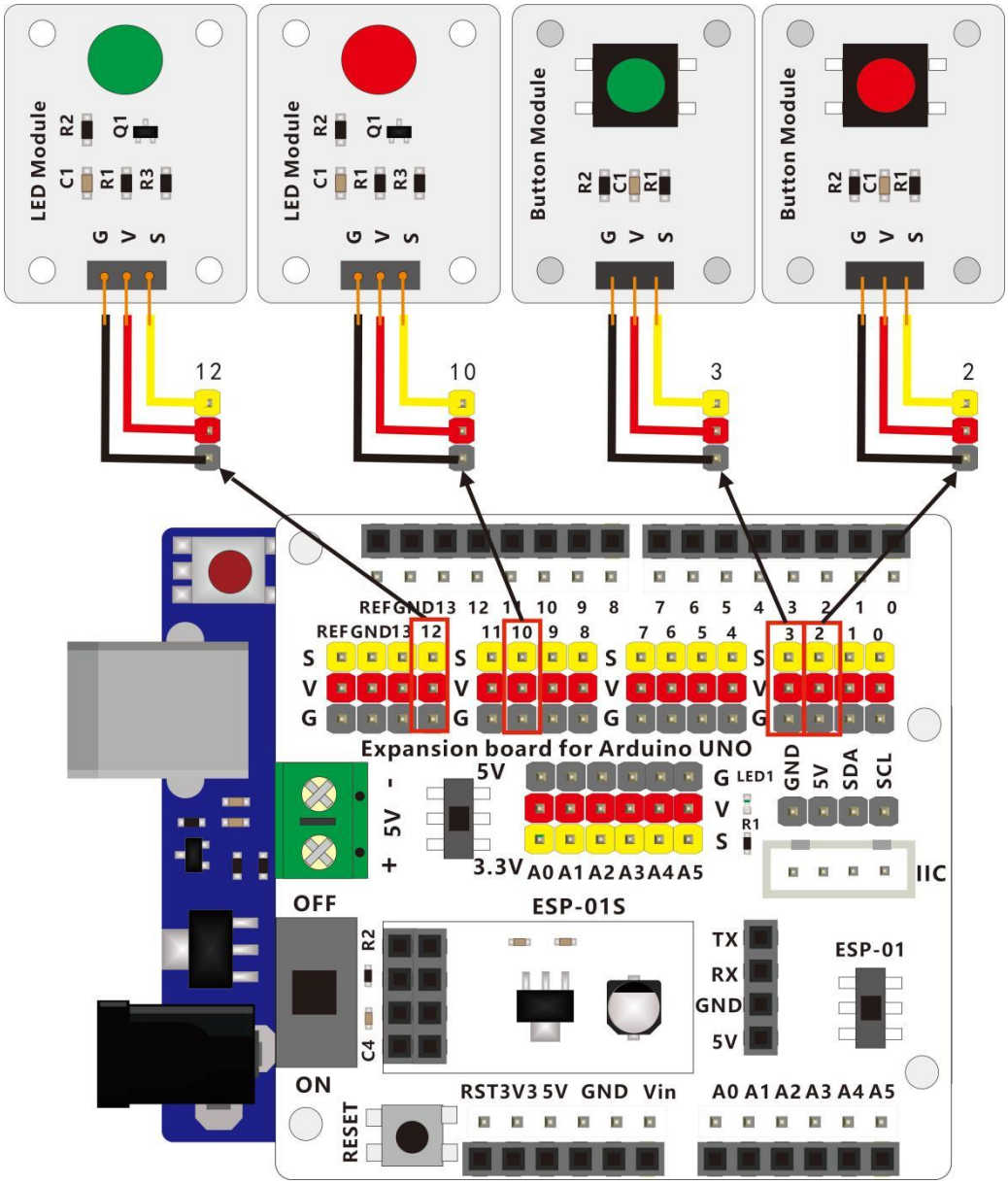

4.Upload the code and test

Connect the computer and UNO board using an A to B USB cable.
The code used in this lesson is placed in the folder:
E:\CKK0021-main\Tutorial\sketches
Double-click the Arduino IDE shortcut on the desktop to open it.

2_1_button_control_led

Click “File”---“open”

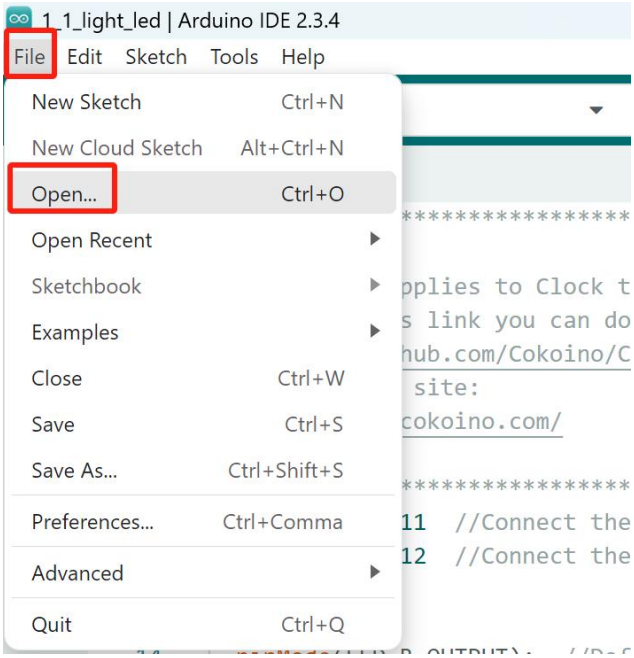

Select the code named 1_1_light_led in the folder:
E:\CKK0021-main\Tutorial\sketches\2_1_button_control_led
Click“open”， Open the program interface as follows

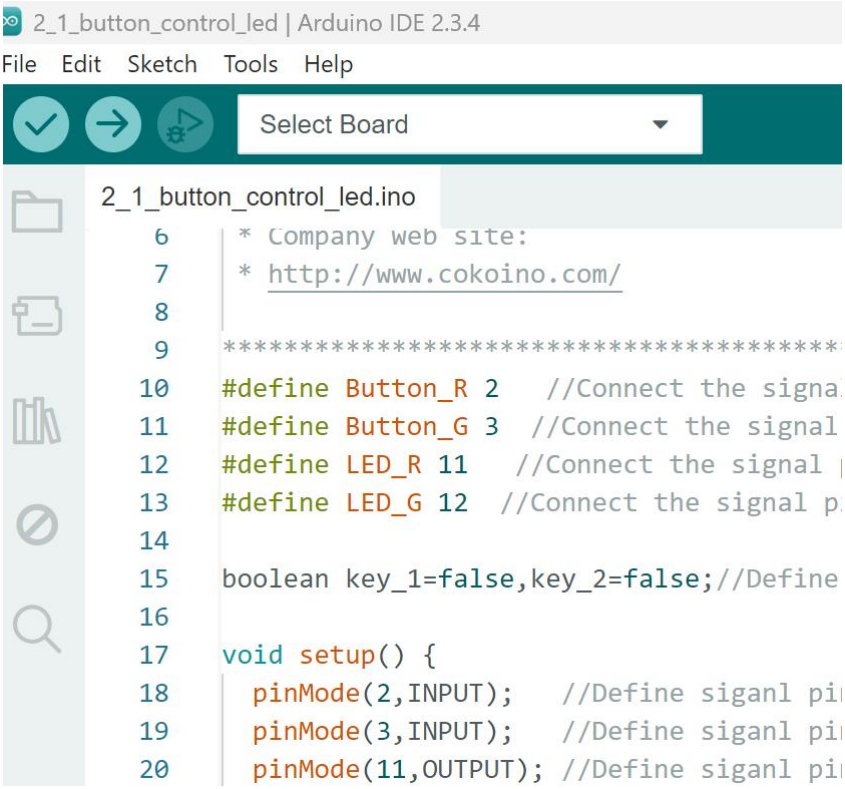

Click the comple button , "Done compiling" appears after the code compiling successfully.

Click the upload button , "Done uploading" appears after the code uploading successfully.

After the code is uploaded successfully,you can use buttons to control the LED lights. Press the red button once to turn on the red LED, and press the red button again to turn off the red LED; Press the green button once to turn on the green LED, press the green button again to turn off the green LED.

5.Any questions and suggestions are welcome

THANK YOU for participating in this Lesson 2 experience!

If you find any errors, omissions or you have suggestions and/or questions about this lesson, please feel free to contact us:

cokoino@outlook.com

We will make every effort to make changes and correct errors as soon as feasibly possible and publish a revised version.

If you want to learn more about Arduino, Raspberry Pi, Smart Cars, Robotics and other interesting products in science and technology, please continue to visit our Amazon Store by search for "**LK COKOINO**" on Amazon. Or visit our official website: **www.cokoino.com**
We will continue to launch fun, cost-effective, innovative and exciting products.

Thank you again for choosing Cokoino products.
LK COKOINO